KOPA
GRILLING SOLUTIONS

Installation and operating Manual

KOPA ROBATA
R120T, R120TT, R120S, R120ST

www.kopaoven.com

Kops pro d.o.o., Industrijska cesta 5, SI-1290 Grosuplje, Slovenija
Tel: +386 1 7888-400, Fax: +386 1 7888-405, E: info@kops.si

This page intentionally left blank

Congratulations!

You are now a proud owner of a KOPA Robata Grill.

Thank you for purchasing a KOPA Robata Grill and welcome to the exciting world of cooking with charcoal.

This Installation and Operating Manual has been specially created to inform you how to safely install and use your KOPA Robata Grill. It serves as an introduction to the wonderful benefits of cooking with KOPA grilling products.

Remember, your new KOPA Robata Grill is a wonderful cooking tool, but in the end it is you who make all the difference.

Contents

Warnings **5**

What is in the box **6**

Robata Grill Parts Diagram and Final Assembly **7**

Grill Parts Dlagram 7

Horizontal Support and Grill Rack Assembly 7

Installation **8**

Distances 8

Extraction 8

Ductwork 9

Dangers of Carbon Conoxide **10**

Operation **11**

Fire Pit 11

Using the Unit for the First Time 11

Starting the Robata Grill 12

Using Robata Grill 13

Determining the Fire Temperature 13

Side Tables 14

Maintenance and Cleaning **15**

Cleaning the Grill Rack 15

Cleaning the Fire Pit 15

Cleaning the Body of the Unit 15

Data sheet **16**

Warranty statement **17**

Warnings

WARNING!

Please Read and understand this entire manual before you install and use the unit.

Incorrect installation and failure to follow operating instructions may result in property damage, physical injury or even death.

Please keep this manual near the grill at all times for future reference. Do not throw it away!

WARNING!

To reduce the risk of fire, the unit should always be mounted on noncombustible material and a heat-resistant finish.

The Grill should not be placed closer to a combustible object smaller than the one described on page 8.

WARNING!

Explosion hazard!

Do not s tore gasoline or other flammable vapors or liquids near the unit.

CAUTION!

It is of the utmost importance that the unit is installed only in accordance with these instructions.

A major cause of fire is failure to maintain the required distance from combustible materials.

This Grill should be installed and serviced by authorized professionals only.

WARNING!

Explosion hazard

Never use volatile chemicals, such as charcoal lighter fluid, gasoline, grease, etc. to start or aid fire. Never use gas (natural or propane).

Unse only kindling or safe (low volatility) solid fire starting aids.

What is in the box

1. Robata Grill
2. Lower grill rack
3. Upper grill rack
4. Support bar - 2x
5. Skewer - 5x
6. Side tables (TT and ST models only)
7. Blank insert (TT nas ST models only)
8. Support base (S and ST models only)
9. Kopa Tong

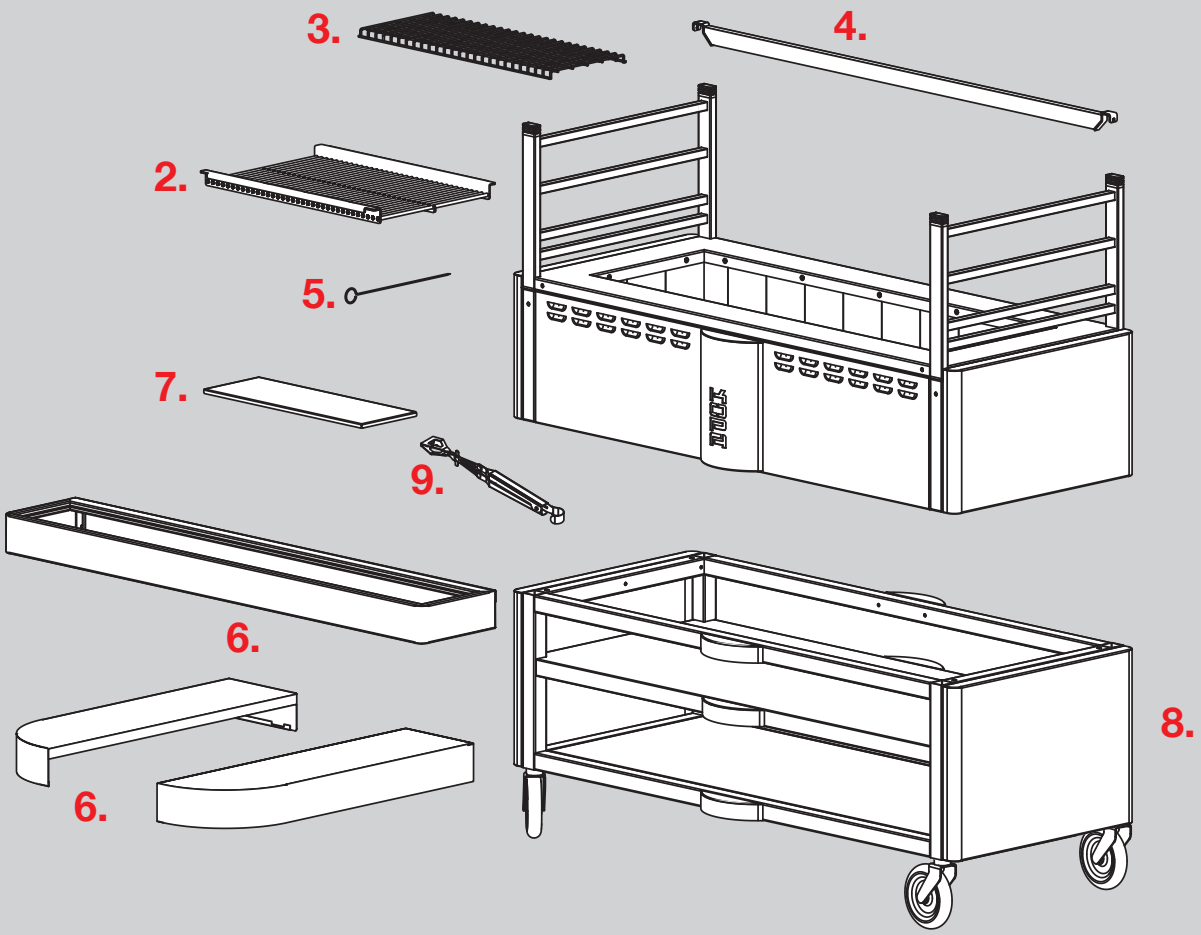

Robata Grill Parts Diagram and Final Assembly

The KOPA ROBATA Grill ships fully assembled. Grill racks, horizontal support and rest of the equipment is packed inside the unit

GRILL PARTS DIAGRAM

1. **Upper grill rack**
2. **Horizontal support bar**
3. **Crosswise bar**
4. **Lower grill rack**
5. **Side table**
6. **GN container insert**
7. **Grill body**
8. **Fire pit**
9. **Blank insert**
10. **Base support**

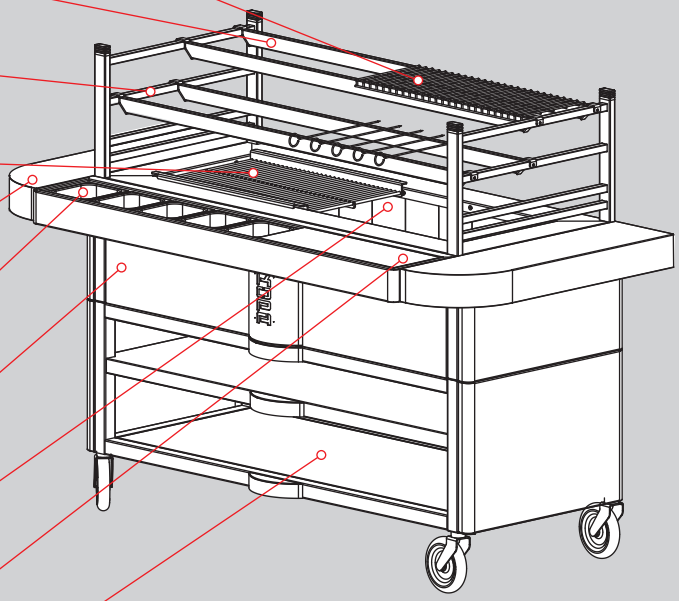

HORIZONTAL SUPPORT AND GRILL RACK ASSEMBLY

1. **Place base grill rack grill on the base level as shown in the picture A.**
2. **Place supports on the desired level as shown in the picture B.**
3. **Place the upper grill rack on the horizontal supports as shown in the picture C.**

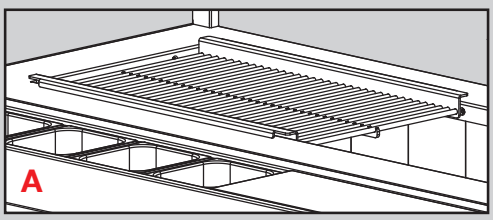

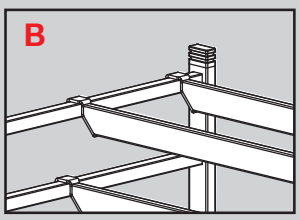

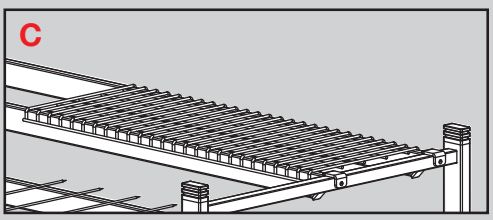

DISTANCES

The unit must be installed to conform to the following minimum clearances:

From non-combustible walls:

BACK and SIDES: 10 cm; FRONT: 1 m

From combustible walls:

BACK AND SIDES: 1,5 m; FRONT: 1,5 m

The unit must be installed on a non-combustible floor and must be at least 2 m distant to the combustible floor from all sides

EXTRACTION

Kopa Robata Grill being an open solid fuel grill it is primarily intended for outdoor use.

If you intend to use Kopa Robata Grill indoors it is of the utmost importance that you obtain the approval of the AHJ (Authority having jurisdiction). This might be a department of the local municipality, building inspector, local fire department etc.

After service, charcoal must be completely extinguished or, if this is not possible, the extraction is set on a timer and runs at least three hours after service, and for another hour before people enter the kitchen.

We recommend that the charcoal is extinguished completely after service. If there are residential properties adjoining your establishment, the extractor should be left to run over night.

We recommend a carbon monoxide (CO) detector or a CO detector connected to an extraction switch that automatically starts extraction as soon as CO buildup is detected.

Below are recommendations for extraction hood and duct. However please note that these are just recommendations. Always adhere to local codes and regulations regarding operation of solid fuel fired ovens and grills in your municipality, especially if those requirements exceed the below recommendations.

For canopy-style commercial cooking hoods, their inside edge should overhang or extend a horizontal distance of not less than thirty (30) centimeters beyond the edge of the cooking surface on all open sides, and the vertical distance between the lip of the hood and the cooking surface should not exceed hundred thirty (130) centimeters.

This unit must be installed under a hood with an approved fire-suppression system. It is highly recommended that a sprinkler system is installed in the ductwork.

Exhaust volume should be 2.500 m3/ h

Adequate inflow of fresh air should be maintained during operation. Check hood manufacturer’s specification regarding this figure.

DUCKTWORK

Exhaust ductwork should be carried out by a qualified, experienced trade team with knowledge of local authority requirements. The following information is supplied ONLY as a guide.

Flue material

Check your local authority requirements

A variety of specialized proprietary flue systems, including stainless steel twin- and triple-skinned products are available and highly recommended. Kopa recommends all joints, seams and flanges to be fully sealed and preferably fully welded. (Your local contractor should advise you of available systems.)

Recommended flue size

We recommend a 300 mm diameter flue size.

Reducing fire risk

Due to the high temperatures of the burning charcoal the exhaust temperatures can be quite high and may include sarks and embers. Since these conditions are a fire hazard, please consider the following factors:

- Keep flue system clean at all times
- Use good quality charcoal that does not spark when fired up
- Inspect the flue at least every three months for soot and/or creosote buildup.

Flue fire prevention

To prevent flue fires:

- Keep the flue system clean
- Keep extraction hood clean and fat free.
- Keep exhaust hood filters clean.
- It is recommended to use a dedicated exhaust extraction system
- Use fire suppression system in the duct.
- If possible, use air washer to wash sooth and particles from the exhaust
- Ensure that the flue temperature does not exceed 80°C.

REMEMBER!

Flue fires normally occur due to poor maintenance and lack of a cleaning schedule. Most fires can be prevented simply by implementing a regular cleaning schedule.

DANGERS OF CARBON MONOXIDE

Many dangers are associated with carbon monoxide (CO), some of which are short term, and some of which can be permanently damaging or even fatal. Carbon monoxide poisoning can occur from a number of sources, inlcuding everyday items and appliances used in the home or at work.

Once carbon monoxide has been breathed in, it replaces oxygen in the blood, thus killing off cells and starving vital organs of oxygen.

One of the outcomes of carbon monoxide poisoning is death. A large enough dose of this odorless, colorless and tasteless gas can kill within minutes.In fact, people die every year from carbon monoxide poisoning without ever knowing what is happening. They simply slip in to unconsciousness and never come around, or they may already be asleep when they breathe in the gas and simply never wake up again.

Smaller doses of carbon monoxide poisoning can cause a range of symptoms and problems, and, depending on how often the gas is breathed in and at what levels, can cause both short-term and long-term damage. One of the dangers associated with short-term symptoms of carbon monoxide poisoning is the non-specific nature of the symptoms, which can often resemble flu.This means that the sufferer can often go on breathing in carbon monoxide, which can then lead to either long-term or permanent damage, or death.

The long-term dangers associated with carbon monoxide can be devastating and can affect the rest of your life. Carbon monoxide can result in brain damage, heart problems, major organ dysfunction, memory or cognitive problems, behavioural and personality changes and a range of other permanent problems.

The dangers of carbon monoxide can arise both in the home and the work environment, and many people are affected by these dangers simply through lack of knowledge and vigilance.

There are numerous ways of decreasing the risk of carbon monoxide exposure. The consequences of inhaling carbon monoxide mostly affect people who are not familiar with signs of poisoning, how to help and how to treat symptoms and what causes carbon monoxide pollution.

Carbon monoxide is a silent and deadly danger, and takes thousands of lives around the world each year. The sad thing is that many carbon monoxide related deaths could have been avoided with some basic precautions and a little vigilance.

However, the fact that this gas is almost undetectable and the fact that the symptoms of carbon monoxide poisoning are so non-specific can contribute to the danger of this gas.

It is important to remember that learning more about the dangers of carbon monoxide can go some way towards helping you to avoid them, or take appropriate action if you are affected by the gas. This in turn could help to prevent serious and long-term damage, and even help to save lives.

FIRE PIT

The fire pit of the unit is made of Chamotte (Grog) bricks. These bricks retain a major amount of heat, which results in an even temperature and consisting grilling results.

The unit will remain hot long after the ambers have been extinguished.

WARNING!

Hot Surfaces

Do not touch surfaces of the unit while it is in operation, and until it has cooled down.

Risk of burns and injuries.

Your Robata Grill uses state-of-the-art insulation to keep the outside surfaces cool. Nevertheless, with prolonged use of the unit these surfaces might get hot and you can burn your skin by touching them.

Be especially careful not to touch the part around and above the fire pit, as this part of the unit will get extremely hot during operation.

USING THE UNIT FOR THE FIRST TIME

Before using the grill racks, wash them thoroughly with a mild dishwashing liquid to remove any remaining machining oils.

When operating the unit for the first time make sure that you burn the grill empty with sufficient fire to burn all the residue oils that may still remain on the grill racks after washing.

Cool down the unit and clean the grill racks for the second time. After that your Robata grill is ready for use.

WARNING!

Flammable liquids such as alcohol, gasoline or similar must not be used to light the charcoal.

This can be very dangerous, as fumes from the liquid can explode.

Serious injury or death may result in using flammable liquids as fire starters.

STARTING ROBATA GRILL

We recommend that you use a KOPA Starter Chimney together with KOPA Fire Starters to start your grill.

Building a fire in an open pit broiler or grill is practically the same as in a fire place. We recommend that kindling or safe (low volatility) solid fire-starting blocks be used with small chunks of wood or with charcoal.

It is recommended that the fire be built in the center of the fire pit.

Turn on the exhaust fan before lighting the fire, if using the unit indoors

Starting fire without using the KOPA Starter Chimney.

1. **Put fire starters alongside some optional pieces of wood under the charcoal in the center of the pit.**
2. **Make a pile of charcoal above the fire starters and ignite the fire starters.**
3. **Wait till the charcoal has ignited and, if needed, add some larger pieces of wood.**
4. **When the charcoal has all ignited, spread the charcoal in the pit and, if needed, add more charcoal.**

Starting fire using KOPA Starter Chimney

1. **Put three to four fire starters on the bottom of the pit within a 30 x 30 cm rectangle.**
2. **Fill the Starter Chimney with charcoal.**
3. **Ignite the fire starters and place the chimney above the fire starters.**
4. **Wait about 20 minutes till the charcoal has ignited.**
5. **Using heat protective gloves open the bottom door of the Starter Chimney and lift it carefully.**
6. **Place the Starter Chimney on a fire-proof surface**
7. **Spread the charcoal in the pit and, if needed, add more charcoal.**

Be careful not to build a fire that is too large for cooking.

TIP!

It is important to wait till the charcoal has stopped burning and the ambers have all turned gray. This means that the charcoal is stabilized and this produces less flares and the cooking temperature is more stable.

USING ROBATA GRILL

1. **You can use the charcoal poker to move the charcoal around. If the charcoal is unevenly spread across the fire pit you can create different temperature zones within the fire pit.**
2. **Put the bottom grill or grills to fit the upper edge of the fire pit. The grill should be inserted so that the frame of the grill rack is even with the upper edge of the fire pit.**
3. **Then place the horizontal support on the desired crosswise level bars. The end hook of the horizontal support bar should be inserted onto the crosswise level bars as shown in the picture C on Page 7. By tightening the screws on the end of horizontal support bars you can block the movement of the horizontal supports along the crosswise bars.**
4. **If you are going to place an upper grill rack on the horizontal supports then it's recommended that you place the upper grill rack on the horizontal supports first and then tighten the screws so you can adjust the horizontal supports accordingly.**
5. **For grilling food on skewers put the horizontal support bars on one of the lower two crosswise bars and position them according to the length of the skewers and food that you are going to grill on them.**

Note that lower levels will be hotter than upper levels.

Make full use of different temperature levels you can create with charcoal positioning and different levels of horizontal support bars.

DETERMINING FIRE TEMPERATURE

You can use this quick and accurate measure of the fire temperature.

Hold your hand close to the cooking surface.

If you have to remove your hand within 2 seconds you have 350° to 450° C; 4 seconds, 150° to 200° C; 6 seconds, slow 90° to 120° C.

IMPORTANT!

To ensure good cooking result it is important to use quality charcoal. We recommend using hard wood restaurant grade charcoal or natural briquettes that use starch as a binding agent..

Always clean Grill racks with a metal brush after use.

SIDE TABLES

If you grill is equipped with side tables you can use standardized GN containers in them.

GN1/9, GN1/6 and GN1/3 will fit into the opening of the side table.

You can place up to 12 GN1/9 containers, up to 8 GN GN1/6 and up to 4 GN1/3 containers into the opening.

Your oven comes equipped with one blank insert that you can position between the containers and that serves as a working surface.

Alternative blank insert sizes are available upon request.

Below is a sample of two possible arrangements:

GN 1/9	GN 1/9	GN 1/9	GN 1/9	GN 1/9	GN 1/9	GN 1/9	GN 1/9	GN 1/9	GN 1/9	GN 1/9	GN 1/9

GN 1/6	GN 1/6	GN 1/3	GN 1/6	GN 1/6	GN 1/9	GN 1/9	GN 1/9

IMPORTANT!

Robata Grill is intended for outdoor use, but don't leave it exposed to the elements. Always bring the unit under the roof or cover it with protective cover after use. Leaving the grill exposed to the elements may damage it.

IMPORTANT!

Use charcoal fuel only! Do not use products not specified for use with this grill.

Do not use pressed log products of any kind. Doing so may damage the unit.

IMPORTANT!

Never use water or ice to put out the ambers or fire. Repeated thermal shock will cause the refractory materials to crack requiring replacement of repair.

Maintenance and cleaning

CAUTION!

Maintenatnce and cleaning should be done only whent the unit has completely cooled down.

Do not use chemical products to clean the grill.

Never pour water into the unit to put out the charcoal!

REMEMBER!

Fire hazard!

Never put ashes into containers made from combustible materials.

Ashes should be placed in a fire-proof metal container especially made to hold hot ash.

Never put an ash container on a floor made of combustible material.

CLEANING GRILL RACKS

Before you use the grill for cooking, you should clean the lower grill racks with a metal brush to remove all any grease or burned food that might have acumulated there.

The upper Grill Racks should be cleaned in a dishwasher or using a mild soap.

CLEANING THE FIRE PIT

Clean the fire pit using metal spatula and place the ashes into a fire proof container.

Always place the container onto a fire-proof flooring. Don’t dispose of the contents of the container until the ashes have completely cooled down. Ambers can remain hot quite some time in the ashes and fire may result if you throw the ashes into the trash before it has cooled down.

CLEANING BODY OF THE UNIT

Clean the outside of your Robata Grill using a mild soap and a cloth. Don’t use abrasive materials to clean the surface as this may scratch the surface.

Data sheet

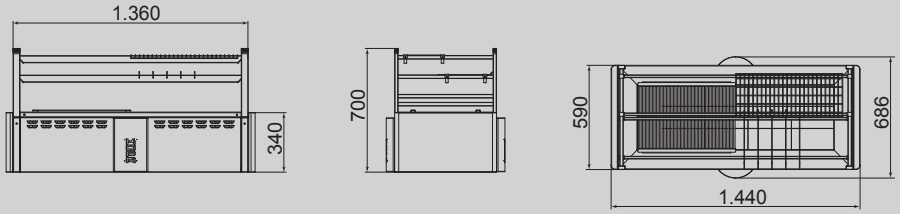

R120T

Weight: 252 kg • Base grill area: 1.130 x 350 mm • Upper grill area per level: 1.240 x 240 mm

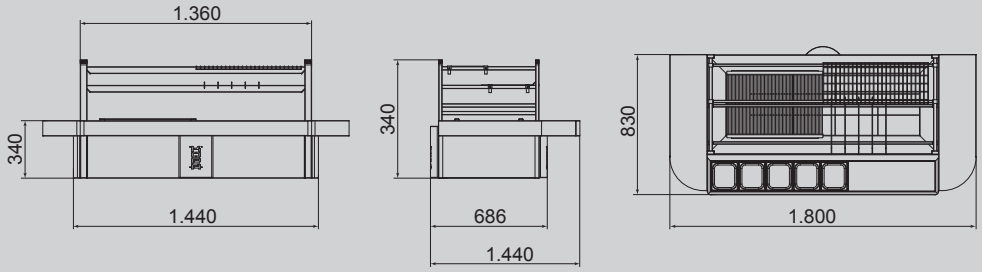

R120TT

Weight: 268 kg • Base grill area: 1.130 x 350 mm • Upper grill area per level: 1.240 x 240 mm

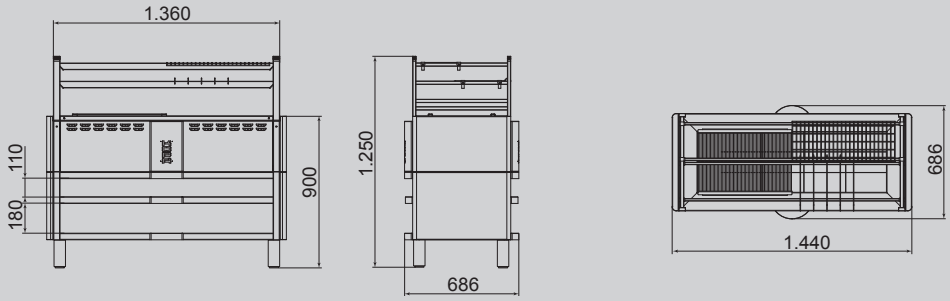

R120S

Weight: 307 kg • Base grill area: 1.130 x 350 mm • Upper grill area per level: 1.240 x 240 mm

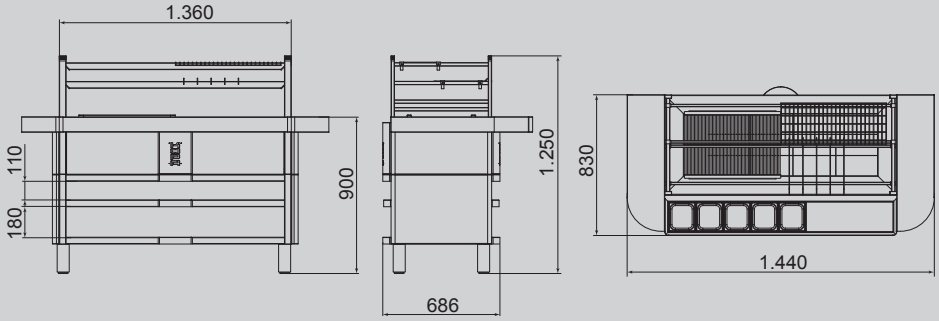

R120S

Weight: 323 kg • Base grill area: 1.130 x 350 mm • Upper grill area per level: 1.240 x 240 mm

Original end user's Limited Warranty

ORIGINAL END USER'S LIMITED WARRANTY

COVERAGE

Kops pro d.o.o. provides a limited warraty that the charcoal oven KOPA and its associated accessories (e.g., additional grill rack), whether purchased concurrently with the oven as part of a configuration or separately, shall be substantially free from defects in material and workmanship. Kops pros limited warranty shall only extend to the original end user, where the original end user purchased the items from an authorized Kops pro d.o.o.retailer. This limited warranty may not be assigned or transferred. The terms of the Limited Warranty in effect as of the date of original purchase shall apply to any warranty claims.

LENGTH OF WARRANTY

The KOPA oven's limited warranty is for a period of 24 months from the date of purchase.. The limited warranty for all other accessories is for a period of 24 months from the date of purchase, or to the expiration date, whichever is earlier.

LIMITED WARRANTY LIMITATIONS

This limited warranty does not cover damage of any sort resulting, but not limited to:

1. Usage outside of environmental specifications i.e. cooking food
2. Abuse, unreasonable use or neglecting instructions found in product user manual.
3. Unusual physical stress like operating long term above 350ºC or short term (up to 5 min) above 400ºC.
4. Damage caused during installation of the product.
5. Damage caused by modification or repair which has not been approved by Kops pro d.o.o..
6. Products whose serial number and/or Material Number label are removed, torn or unreadable.
7. Damage caused by improper or improperly used packaging.
8. In the event that pressed log products of any type have been burned in the equipment.
9. Damage resulting from use of chemical cleaning products in the oven, as well as any damage from liquids or chemicals being poured or sprayed into the oven.
10. Products that are found/reported to be stolen.
11. Normal cracking due to expansion and contraction stress relief .
12. Colour change and slight deformation of steel or stainless steel parts due to normal operating temperature.
13. Charcoal grate

LIMITED WARRANTY VOIDED

The limited warranty is immediately voided if: the oven or its associated accessories are serviced or repaired by any entity, including persons, not authorized by Kops pro d.o.o.; specified maintenance is not performed; the oven is used with one, or more, unauthorized accessories; the associated accessories are used with an unauthorized oven; or the oven or associated accessories are not used in accordance with Kops pro d.o.o. approved instructions.

EXCLUSIVE REMEDY

At Kops pro d.o.o. sole discretion, Kops pro shall have the option to repair, replace, or provide a credit. In the event of replacement, Kops pro shall have the right at its sole discretion to replace the item with a new, or refurbished, same or similar item. Determination of a similar item shall be at the sole discretion of Kops pro. In the case of replacement, the replacement at a minimum shall reflect the prorated time remaining for the item based on the remaining limited warranty period. In the case of a credit, the credit shall be the prorated value of the item based on the lower of the original item cost of the same or similar item and the remaining limited warranty period. In no event, shall the limited warranty period of a replacement item extend past the limited warranty period of the item it is replacing.

WARRANTY SERVICE

In order to obtain warranty service, contact the retailer from whom the item was purchased, or Kops pro d.o.o. customer service. The item shall be shipped at the original end user's expense to a destination specified by the retailer or Kops pro d.o.o.

OBLIGATIONS AND WARRANTY LIMITS

THE FOREGOING LIMITED WARRANTY IS IN LIEU OF AND SPECIFICALLY EXCLUDES AND REPLACES, TO THE DEGREE PERMITTED BY APPLICABLE STATE LAW, ALL OTHER EXPRESS OR IMPLIED WARRANTIES, INCLUDING, BUT NOT LIMITED TO, THE IMPLIED WARRANTIES OF MERCHANTABILITY AND FITNESS FOR A PARTICULAR PURPOSE. NO PERSON (INCLUDING ANY AGENT, DEALER, OR REPRESENTATIVE OF KOPS PRO D.O.O.) IS AUTHORIZED TO MAKE ANY REPRESENTATION OR WARRANTY CONCERNING THE OVEN OR ITS ASSOCIATED ACCESSORIES, EXCEPT TO REFER TO THIS LIMITED WARRANTY.
THE EXCLUSIVE REMEDY WITH RESPECT TO ANY AND ALL LOSSES OR DAMAGES RESULTING FROM ANY CAUSE WHATSOEVER SHALL BE AS SPECIFIED ABOVE. KOPS PRO D.O.O. IN NO EVENT BE LIABLE FOR ANY CONSEQUENTIAL OR INCIDENTAL DAMAGES OF ANY KIND, INCLUDING, BUT NOT LIMITED TO, EXEMPLARY DAMAGES, SPECIAL, PUNITIVE, COMMERCIAL LOSS FROM ANY CAUSE, BUSINESS INTERRUPTION OF ANY NATURE, LOSS OF PROFITS OR PERSONAL INJURY, EVEN IF KOPS PRO D.O.O. HAS BEEN ADVISED OF THE POSSIBILITIES OF SUCH DAMAGES, HOWEVER OCCASIONED, WHETHER BY NEGLIGENCE OR OTHERWISE, UNLESS APPLICABLE STATE LAW DOES NOT ALLOW SUCH EXCLUSION OR LIMITATION.

This page intentionally left blank.

REDISCOVER GRILLING

KOPA

GRILLING SOLUTIONS